WiseUp

WAKE UP, SOUTH AFRICA.

The future won't wait. A call to every parent and teacher who loves the next generation.

NotebookLM

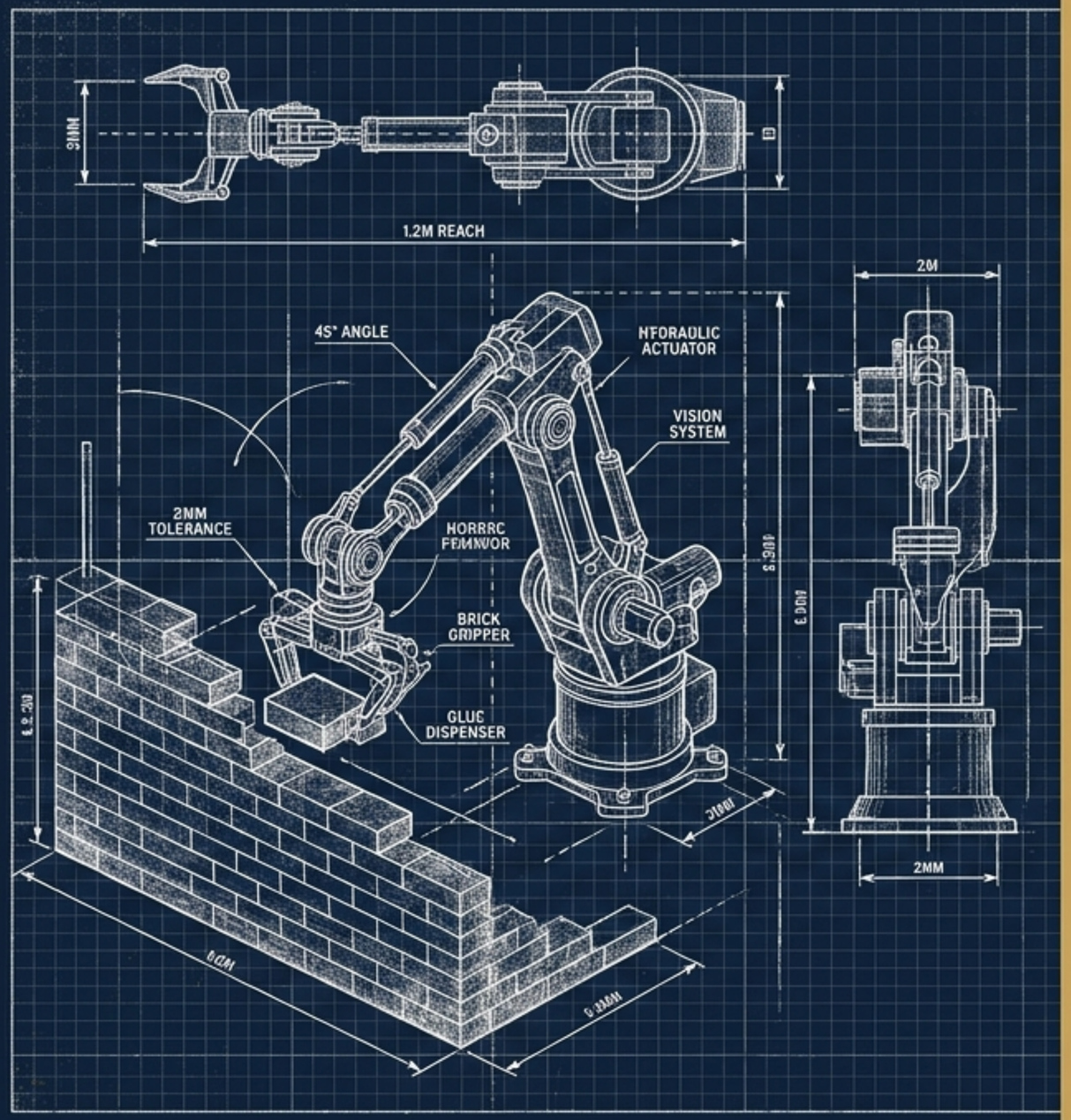

Meet Walter, the machine that doesn't take lunch breaks.

The Reality: A terrabase robot currently operating on UK building sites.

The Output: Does the work of 5 human bricklayers + 1 laborer in a single hour, operated by just one person.

The Precision: Executes building plans from memory with a 2mm tolerance—a level of accuracy less than 1% of humans can match.

The Environment: Uses structural glue instead of cement, massively reducing the carbon footprint of construction.

> *"In 20 years' time, who is going to build the houses?"*
>
> — Dr. Yantalinsky, Co-developer

NotebookLM

Our house is already on fire.

8.8 MILLION

South Africa is not a bystander:

General Unemployment: **31.4%**

Youth Unemployment (Broad): **Over 52%**

8.8 million young South Africans (aged 18–35) are completely locked out.
Not in employment. Not in education. Not in training. They are just waiting.
And the jobs they are waiting for are about to disappear.

NotebookLM

The entry-level ladder is being quietly removed.

Rung 3: Junior Financial Analysis

Being replaced by algorithmic processing.

Rung 2: Customer Service & Basic Coding

Being absorbed by AI agents.

Rung 1: Administrative Work & Data Entry

Being automated by language models.

A major South African retail bank is already using AI to drastically improve productivity without reducing current staff—meaning they simply halt future hiring. The doors are closing **before our 10.3% of unemployed graduates** even get a chance to apply.

NotebookLM

We are celebrating pass rates while the goalposts have completely moved.

The False Comfort:
In 2025, South Africa achieved a record 88% matric pass rate. Millions of matriculants were celebrated.

The Harsh Reality: We are training children for a race whose track has already changed. A matric certificate no longer guarantees a livelihood; most enter a rapidly shrinking entry-level market.

The Gap: South African businesses are simultaneously struggling to fill AI-related positions, forced to outsource or pay premiums for foreign talent. Our classrooms are oriented around a world that is disappearing.

NotebookLM

The twist nobody saw coming in the construction industry.

The Obsolete Path (Bricklayer)	The Future Blueprint (Robot Operator Building with Bricks)
• **Nature of work:** Manual, physically grueling, repetitive.	• **Nature of work:** Directing AI, problem-solving, tech-enabled oversight.
• **Youth response:** Zero interest (Average UK age is 46).	• **Youth response:** Energized and drawn to it. It feels like playing a computer game.
• **Economic fate:** Replaced by automation.	• **Economic fate:** Highly valued human director.

The WEF projects **92 million jobs** eliminated by 2030, but **170 million new roles created**. Over the next two years, 50-55% of existing jobs will be reshaped. The next generation isn't afraid of technology; they are energized by it. We just need to give them a robot to direct.

NotebookLM

What the machine-age future actually rewards.

The jobs that survive are built on what machines cannot manufacture. The young person who masters these traits will not be replaced by a machine—they will direct one.

Wisdom
The ability to synthesize information and navigate complex realities.

Discernment
Sound judgment in an era of accelerating complexity.

Emotional Intelligence
The capacity for genuine care, relational connection, and empathy.

Character
Integrity, resilience, and the inner strength to lead under pressure.

NotebookLM

A word to every South African parent.

- You are raising a child who will enter the workforce at the absolute peak of this disruption (2030).
- You do not need to be a technology expert. You simply need to stop being passive.
- Your child needs more than a matric certificate and a prayer.

> **Invest deliberately in who they are becoming**, not just what they are **achieving. The future will reward wisdom. Make sure your child is building some.**

NotebookLM

A word to every South African teacher.

- You stand at the most consequential frontline of this country's future.
- Walter the robot can lay bricks at 2mm precision, but he cannot build human beings. That is still your job.
- You have the power to do what no algorithm can: look a child in the eye, believe in who they can become, and shape the person behind the results.

Teach them to think. Teach them to question. Teach them to lead themselves. The curriculum is just the vehicle—the human being is the destination.

NotebookLM

Equipping the next generation for an AI-driven economy.

This is why WiseUp K2U exists for the youth of South Africa.

Real-World Life Skills

Moving beyond rote learning to practical, adaptable survival skills for a changing world.

Entrepreneurial Mindset

Training youth to see gaps, solve problems, and create value rather than waiting to be hired.

Career Clarity

Mapping paths in an AI economy, focusing on roles requiring human judgment and technological oversight.

Purpose & Character

Discovering God-given purpose and building the inner resilience that no machine can replicate.

NotebookLM

Walter is laying bricks at 2mm precision while we debate whether children should have phones in classrooms.

We do not have time for business as usual. The wave is here.

Are our children ready to ride it?

NotebookLM

WiseUp

“We empower young people to discover their God-given purpose and build a life worthy of their highest calling.”

WhatsApp 071 957 5853
www.wiseupk2u.com

This explainer forms part of the WiseUP Collection.

NotebookLM